FAMOUS™
MACHINE

F-HM100

F-HM100是菲玛斯自主设计的适用于场地有限，小产量用户的小型热熔机，
可以处理EPS，EPP，EPE等发泡材料，包括小饭盒，杯子以及一些小型包装箱。

The F-HM100 EPS hot melting machine is designed by FMS,
Which is fit for the small place, small capacity and this unit
can process EPS EPP EPE foam waste,
include the food trays, cups and small boxes.

特点/Applications
适用于小型场地。
价格优惠。
可以处理不同种类的小型泡沫材料，如饭盒，发泡片材等小型泡沫包装材料。

Machine suitable for small place.
Lower price.
Processing multiple foam materials-food trays,
foam sheet, foam box, small package box.

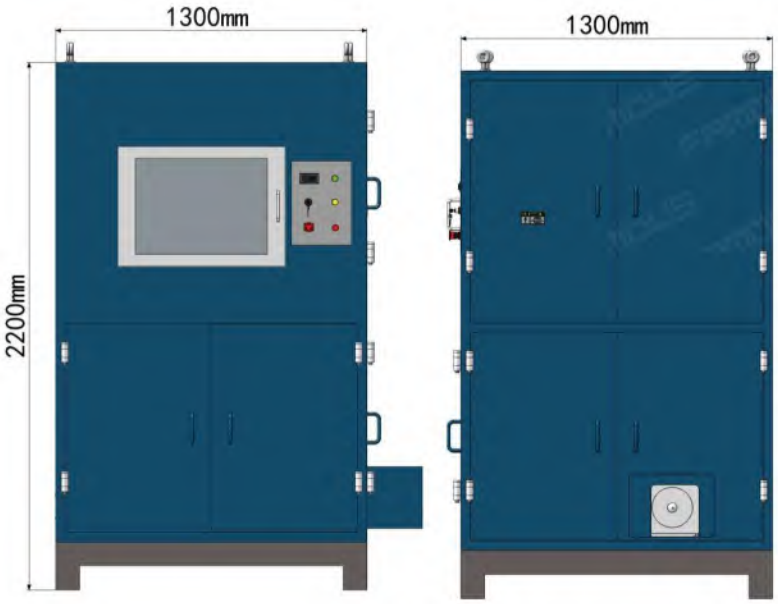

FAMOUS™
MACHINE

F-HM200

产量：100kg/h
Capacity:100kg/h

F-HM200主要适用于中型回收加工中心，可以处理EPS，EPP，EPE等发泡材料，可以让废料体积减少80%-90%。

F-HM200 hot melting machine is used for the middle size waste recycling center, the EPS,EPP,EPE material can all treated by this unit, and the space of the waste material can be reduced 80%-90%.

特点/Applications
适用于中型回收中心或者海鲜市场。
投料口高度适中，方便投料。
可以处理不同种类的发泡材料，如泡沫箱，发泡包装箱等。
Use in middle size recycling center,seafood market.
Easy to feed the material to the hopper by hand.
Processing multiple materials-packing box,containers,foaming box.

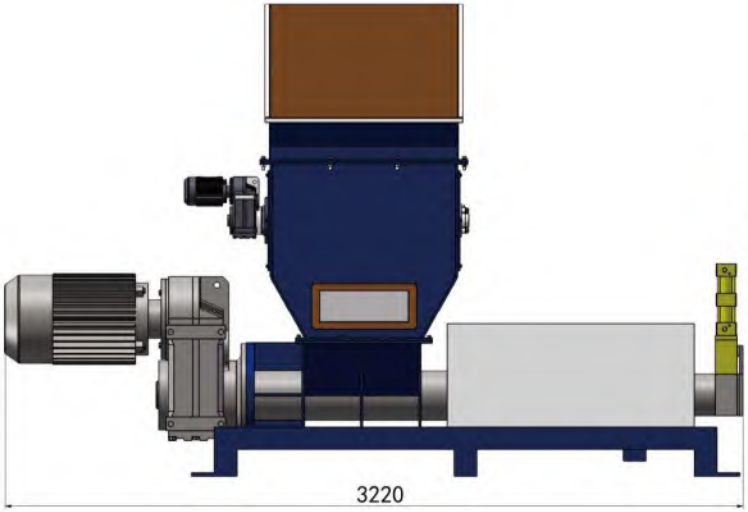

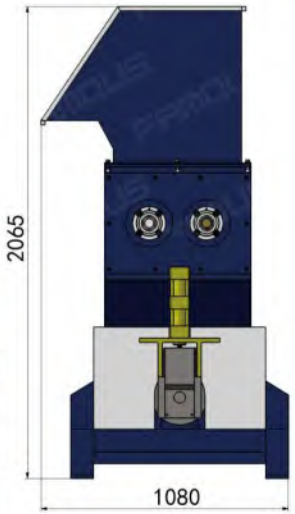

FAMOUS™
MACHINE

F-HM400

产量：200kg/h
Capacity:200kg/h

F-HM400主要适用于大型回收加工中心，可以处理EPS，EPP，EPE等发泡材料，可以让废料体积减少80%-90%。

F-HM400 hot melting machine is used for the big size waste recycling center, the EPS,EPP,EPE material can all treated by this unit, and the space of the waste material can be reduced 80%-90%.

特点/Applications
适用于大型回收中心或者加工厂。
另选配输送带方便投料。
可以处理不同种类的泡材料，如泡沫箱，发泡包装箱等。
Use in big size recycling center,seafood market.
Conveyer belt is needed for this unit to feed the material easily.
Processing multiple materials-packing box,containers,foaming box.

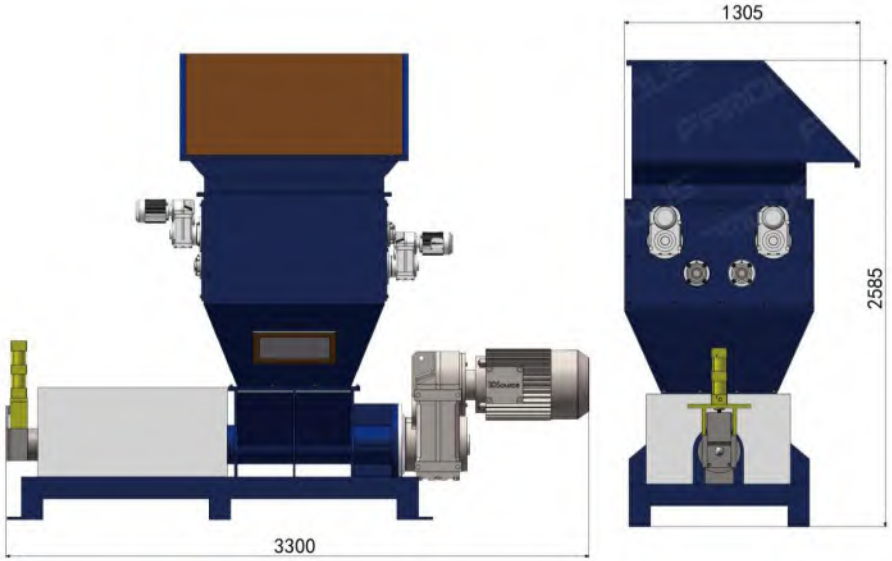

FAMOUS™
MACHINE

F-HM热熔线采用输送带送料，风送加料仓热熔系统。采用分体式设计来提高更高产量的热熔解决方案。
主要用于大型回收中心，大型海鲜食品加工中心，以及城市分拣中心。
The F-HM hot melting line adopt the conveyer belt, fan delivery and silo system to increase the capacity of the line.
Mainly use in large size recycling center, big sea food market and the big distribution center.

F-HM Line

产量：250kg/h
Capacity:250kg/h

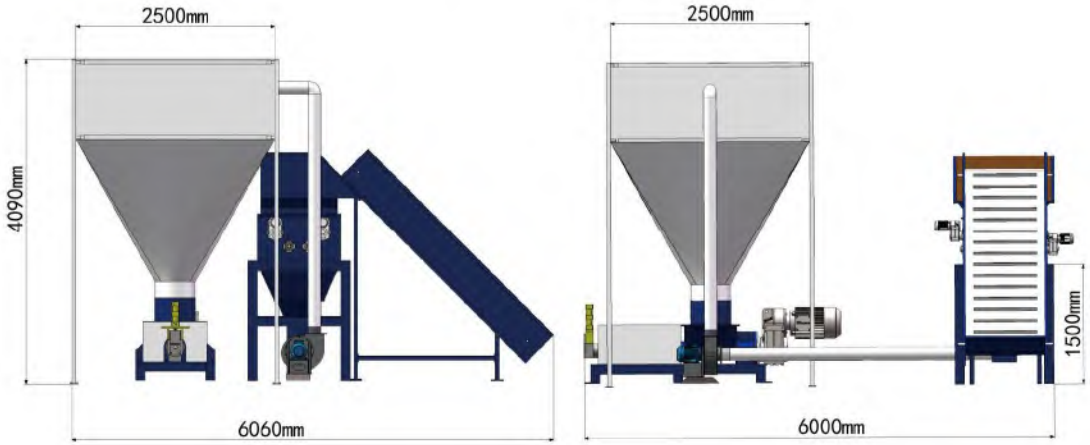

FAMOUS™
MACHINE

F-NHM

产量：80-200kg/h
Capacity:80-200kg/h

F-NHM热熔机采用成型模具，可以将物料热熔成枕木壮物块，更高密度，更容易堆放，运送效率更高。
The F-NHM hot melting machine can melt the material into crosstie blocks. The customer can get the material in higher density,easy to stack,to increase transportation efficiency.

设备参数 Machine parameters:

Model	型号	F-HM100	F-HM200	F-HM400
Feeding Size	进料口尺寸	650x400mm	900x600mm	1000x900mm
Screw diameter	螺杆直径	Φ138mm	Φ190-120mm	Φ190-120mm
Screw Speed	螺杆转速	165rpm	110rpm	150rpm
Heating power	加热功率	3kw	10kw	10kw
Main motor power	主电机功率	7.5kw	15kw	22kw
Crusher motor power	破碎机功率	2.2kw	2.2kw x 2set	2.2kw x 4set
Blades quantity	刀具数量	8 sets	8+9 sets	10+11+10+11 sets
Weight	重量	600kg	1500kg	2200kg

Model	型号	F-NHM200	F-NHM400
Screw diameter	螺杆直径	Φ190-120mm	Φ190-120mm
Screw speed	螺杆转速	110mm	110mm
Capacity	产量	80-120kg/h	180-200kg/h
Screen hole diameter	滤网直径	50mm	50mm
Motor power	电机功率	15kw	22kw
Crusher motor power	破碎机功率	2.2kw x 2 sets	2.2kw x 4 sets
Crusher blades quantity	破碎刀数量	9+10sets	10+11+10+11sets
EPS Block Size L×W×H	出料尺寸	110*110*960mm	130*130*960mm
EPS block density	出料密度	800-1000kg/cbm	
Weight	重量	1800kg	2500kg

FAMOUS™
MACHINE

F-CP200

产量：50kg/h
Capacity:50kg/h

F-CP200是菲玛斯自主设计的适用于场地有限，小产量用户的小型冷压机，
可以处理EPS,EPP,EPE等发泡材料，
包括小饭盒，杯子以及一些小型包装箱。

The F-CP200 compactor machine is designed by FMS, which is fit for the small place, small capacity and this unit can process EPS EPP EPE foam waste, include the food trays, cups and small boxes.

It is used in small place;
Non-toxic, No smell, Environmental protection;
Processing multiple foam materials-food trays, containers, small packing box.

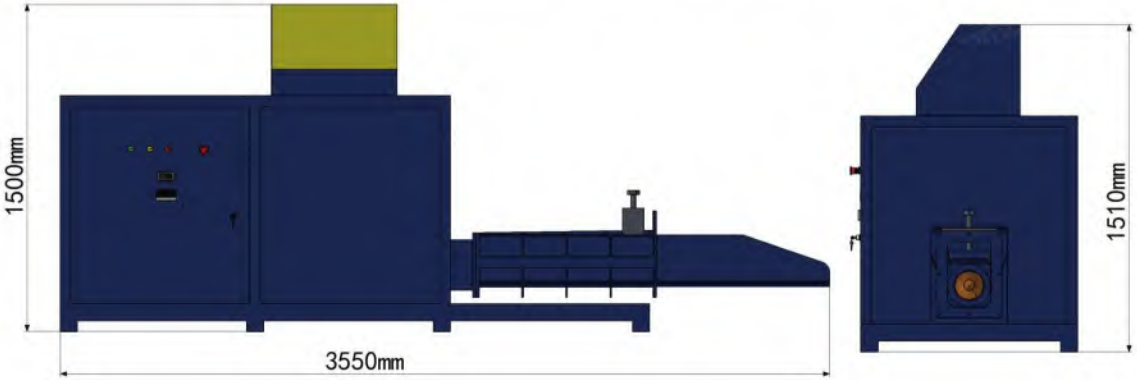

FAMOUS™
MACHINE

F-CP250

产量：100kg/h
Capacity:100kg/h

F-CP250主要适用于中型回收加工中心，可以处理EPS，EPP，EPE等发泡材料，压缩率为1:30-1:50。

F-CP250 compacting machine is used for the middle size waste recycling center, the EPS,EPP,EPE material can all treated by this unit, and the pressing ratio is 1:30-1:50.

特点/Applications
适用于中型回收中心或者海鲜市场。
投料口高度适中，方便投料。
可以处理不同种类的发泡材料，如泡沫箱，发泡包装箱等。
Use in middle size recycling center,seafood market.
Easy to feed the material to the hopper by hand.
Processing multiple materials-packing box,containers,foaming box.

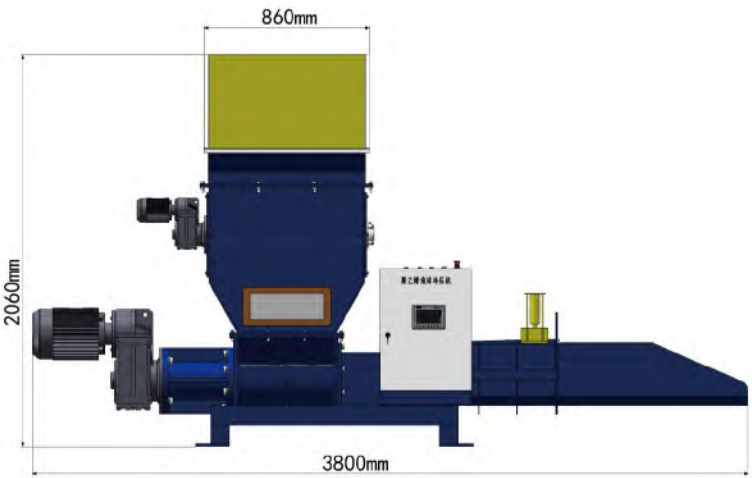

FAMOUS™
MACHINE

F-CP380

产量：200kg/h
Capacity:200kg/h

F-CP380主要适用于大型回收加工中心，可以处理EPS，EPP，EPE等发泡材料，压缩比为1:30-1:50。

F-CP380 compactor machine is used for the big size waste recycling center, the EPS,EPP,EPE material can all treated by this unit, and the pressing ratio is 1:30-1:50.

特点/Applications
适用于大型回收中心或者加工厂。
另选配输送带方便投料。
可以处理不同种类的发泡材料，如泡沫箱，发泡包装箱等。
Use in big size recycling center,seafood market.
Conveyer belt is needed for this unit to feed the material easily.
Processing multiple materials-packing box,containers,foaming box.

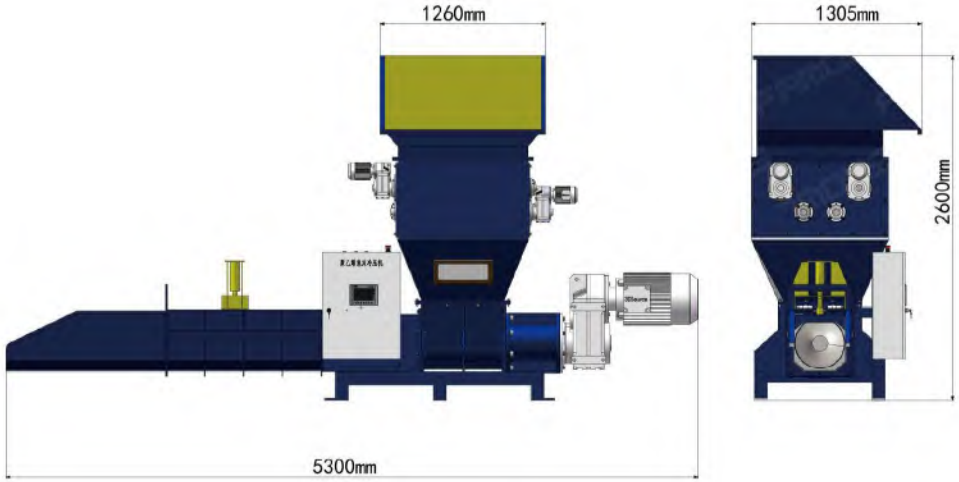

FAMOUS™
MACHINE

F-CP Line

产量：300kg/h
Capacity:300kg/h

F-CP冷压线采用输送带送料，风送加料仓热熔系统。采用分体式设计来提高更高产量的热熔解决方案。
主要用于大型回收中心，大型海鲜食品加工中心，以及城市分拣中心。
The F-CP compacting line adopt the conveyer belt, fan delivery and silo system to increase the capacity of the line.
Mainly use in large size recycling center, big sea food market and the big distribution center.

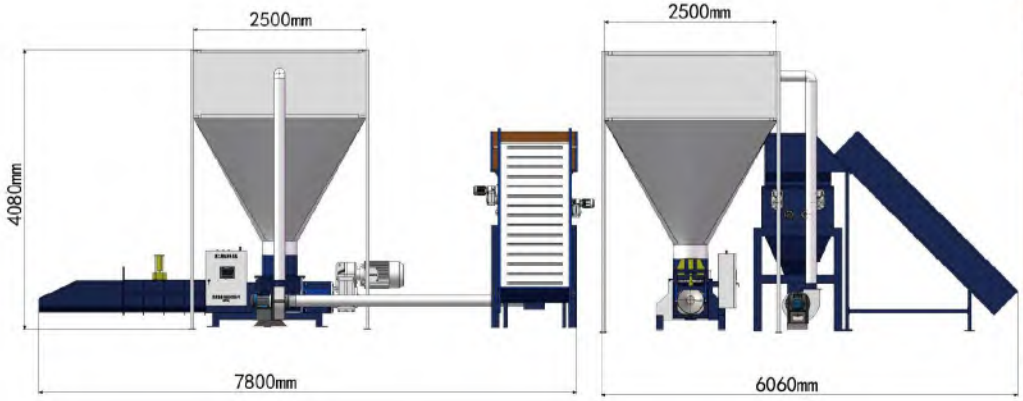

FAMOUS™
MACHINE

F-HCP

产量：200kg/h
Capacity:200kg/h

F-HCP冷压线采用两段式液压压缩，可以将物料压缩至更高密度，约350-400kg/m3，更容易堆放，运送效率更高。
The F-HCP hydraulic Compacting line can compact the material to 350-400kg/m3 . The customer can get the material in higher density,easy to stack,to increase transportation efficiency.

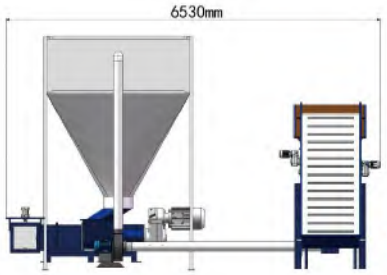

设备参数 Machine parameters:

Model	型号	F-CP200	F-CP250	F-CP-380
Screw Diameter	螺杆直径	Φ180mm	Φ240mm	φ350mm
Input size	进料口尺寸	500x400mm	900x600mm	1000x900mm
Screw rotation speed	螺杆转速	36rpm	42rpm	42rpm
Crusher blades	破碎机刀片	8 sets	9+10 sets	10+11+10+11sets
Blade rotation speed	破碎机转速	120rpm	120rpm	120rpm
Main motor	主电机	4kw	7.5kw	15kw
Crusher motor	破碎机电机	2.2kw	2.2kw X 2sets	2.2kw X 2 sets
Hydraulic motor	液压泵电机	NO	1.5kw	1.5kw
Production size	产品尺寸	200x200mm	250x250mm	380x380mm
Weight	重量	650kg	1500kg	2500kg

Model	型号	F-CP Line	F-HCP
Screw Diameter	螺杆直径	φ350mm	
Input size	进料口尺寸	1000x900mm	
Screw rotation speed	螺杆转速	42rpm	
Crusher blades	破碎机刀片	10+11+10+11sets	
Blade rotation speed	破碎机转速	120rpm	
Main motor	主电机	15kw	
Crusher motor	破碎机电机	2.2kw X 4 sets	
Hydraulic motor	液压泵电机	1.5 kw	15kw
Production size	产品尺寸	380x380mm	400x400mm

FAMOUS™
MACHINE

F-SS系列撕碎机
F-SS Series shredder

单轴撕碎机的设计可满足各种行业的废料回收要求，适用于冷压块、热熔块、木材、纤维、橡胶、生活垃圾回收处理等，可回收材料种类繁多。我们根据物料进料大小、产量以及最终产品的出料尺寸等为客户配置最优方案。
Single shaft shredder is suitable for recycling wide range of materials. It is an ideal machine for Cold compacted block, hot melted block, paper, fiber, rubber, organic waste and a wide variety of materials. As per our customers' requirements, such as the input size of the material, capacity and the final output size etc, we could work out a suitable proposal for our clients.

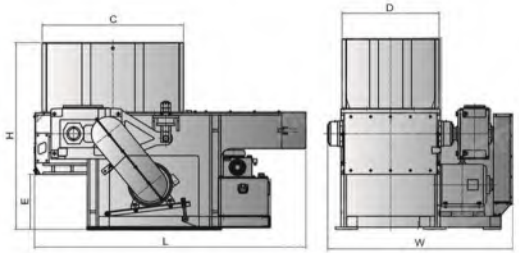

Item	项目	F-SS2260	F-SS 3060	F-SS 3080
Dimension L/W/H	外形尺寸 L/W/H	1780×1350×1754 mm	2455×1478×1700 mm	2455×1678×1700 mm
Cutting Chamber C/	粉碎室尺寸 C/D	857×602mm	1200×600mm	1200×800mm
Height of discharge port	出料口高度 H	546mm	500mm	500mm
Cylinder Stroke	油缸行程	500mm	750mm	750mm
Rotor Diameter	刀体回转直径	φ224.7mm	φ300mm	φ300mm
Main Shaft Speed	主轴转速	83 r/min	83 r/min	83 r/min
Screen Mesh	筛网孔径	φ25mm	φ40mm	φ40mm
Rotor-knives	动刀数量	28+4 pcs	30+4 pcs	42+4 pcs
Stator-knives	定刀数量	2+2pcs	2pcs	2pcs
Main Motor Power	主机功率	18.5KW	22KW	30KW
Hydraulic Motor Power	液压电机功率	2.2KW	2.2KW	2.2KW
Weight	设备重量	1400 (kg)	1550 (kg)	1950 (kg)

F-PC系列破碎机
F-PC Series Crusher

F-PC系列塑料破碎机采用的是牢固的焊接钢结构，可破碎的物料种类繁多，能够满足不同行业废料回收的要求，适用于块料、胶头、PET瓶、管材、片材、橡胶、大块实心物料以及注模过程中产生的废料。
The PC series Granulators are heavy duty, high speed precision granulation machines designed for the rapid size reduction of various types of material in a single pass.

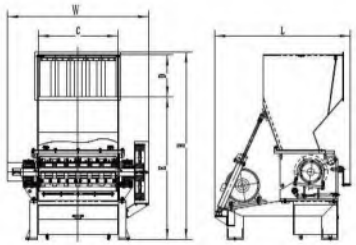

Item	项目	F-PC2660	F-PC3280	F-PC4280	F-PC42100
Dimension L/W/H(mm)	外形尺寸 L/W/H	1483×1328×1740 mm	1586×1568×1814 mm	1770×1642×2425 mm	1770×1842×2425 mm
Cutting Chamber C/D	粉碎室尺寸 C/D	634×437 mm	834×475 mm	834×540 mm	1034×540 mm
Height of discharge port E	出料口高度 E	1567 mm	1369 mm	1842 mm	1842 mm
Rotor Diameter	刀体回转直径	φ260 mm	φ320 mm	φ420 mm	φ420 mm
Main Shaft Speed	主轴转速	584 mm	627 mm	466 mm	466 mm
Screen Mesh	筛网孔径	φ8 mm	φ12 mm	φ12 mm	φ12 mm
Rotor-knives	动刀数量	3×2 PCs	3×2 PCs	3×2 PCs	3×2 PCs
Stator-knives	定刀数量	2×2 PCs	2×2 PCs	2×2 PCs	2×2 PCs
Main Motor Power	主机功率	15 kw	22 kw	37 kw	45 kw
Weight	设备重量	960 (kg)	1730 (kg)	2800 (kg)	3230 (kg)

FAMOUS™
MACHINE

F-PZ Pelletizing Line

产量：200-500kg/h
Capacity:200-500kg/h
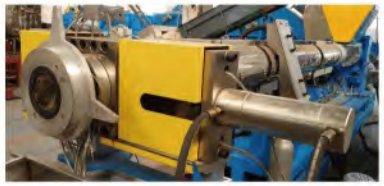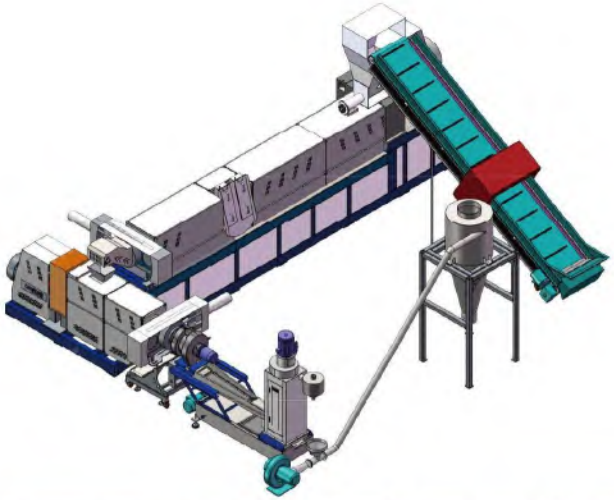
该生产线是有，螺旋上料机、挤出机、换网器、水环切粒模具、水环切粒系统、风送料仓、电气控制系统组成。
适用原材料：PP,PE,EPS热熔冷压料。
The EPS ingot pelletizing line is composed by screw feeder, extruder,screen changer,water ring cutting system ,fan delivering and controlling system.
Material:PP，PE，EPS ingot,EPS cold compacted block.